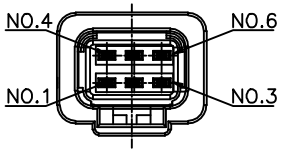

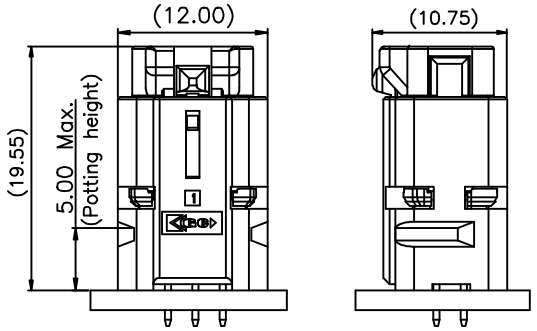

Mating figure

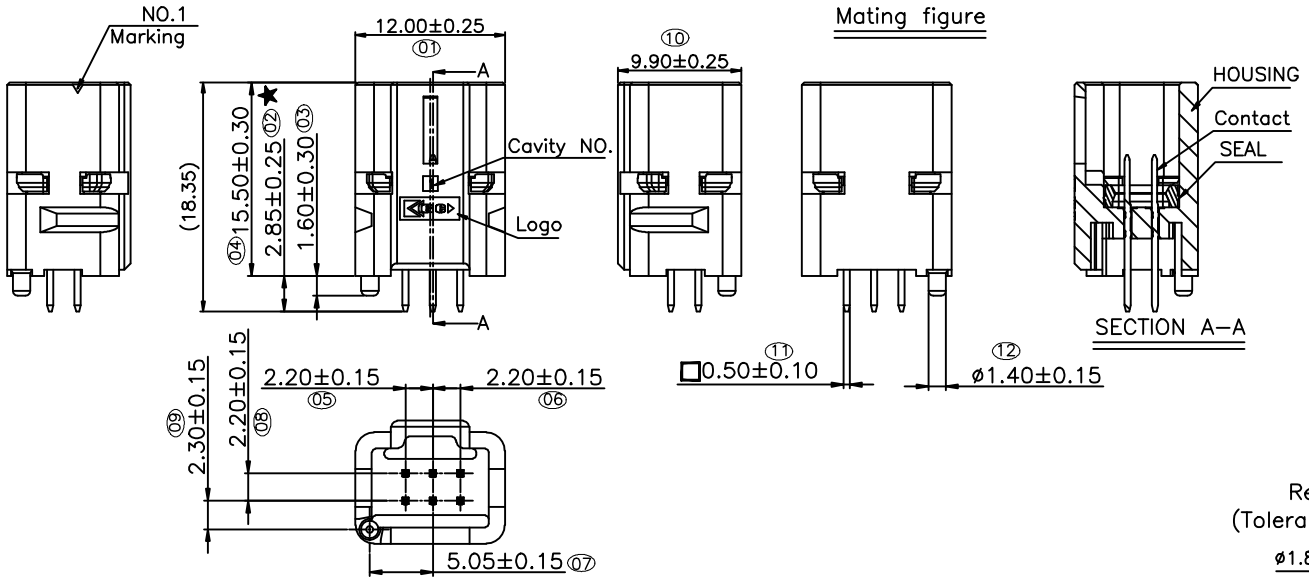

Specifications
Current Rating: 4A
Voltage Rating: 250V AC/DC.
Insulation Resistance:1000MΩMin.
Dielectric Withstanding Voltage:650VAC
Contact Resistance:30mΩMax.
Operating Temperature:−40°C to +105°C
Materials
Contact:Brass
Insulator Material:Temperature Thermoplastic, UL 94V−0 PBT or the equivalent material
☆ All materials must meet Greenconn hazardous substances control standards.
"★": Critical Characteristics.
indicates product characteristics, functionalities, and manufacturing processes regarding to customer's specifications
"☆": Safety Features
indicates product characteristics, functionalities, and manufacturing processes complying to legal regulations stated by local government

Recommended P.C.Board Layout
(Tolerance:±0.05.PCB Thickness=1.60±0.05)

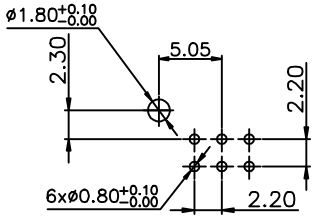

Ordering Information

G ZWA201− 03 XX B 001 K 1 B X

- 03: No. of Pins Per ROW 03
- XX: Standard Plating
  - L3=Ni 40~120u" Sn 40~100u
  - 1C=Ni 40~120u" Contact area Au 8u" Min Solder area Sn 40~120u"
- 1: Color 1=Black
- X: Standard Packing B=Tray

Greenconn Website:www.greenconn.com E−mail:sales@greenconn.com	3RD.ANG PROJ.	GENERAL TOLERANCE		DESIGNED:	DATE:	DWG. NO. GZWA201−CB001	TITLE.
		X.°±3.0°	X.±0.30	CHECKED:	DATE:	PART NO. GZWA201−03XXB001K1BB	2.2Pitch 6Pin SEAL Series Header Connector
		.X°±2.0°	.X±0.25				
		.XX°±1.0°	.XX±0.20	APPROVED:	DATE:		
REV. B / UNIT. mm / SCALE. 3:2	PAGE. 1/1	.XXX°±0.5°	.XXX±0.15				