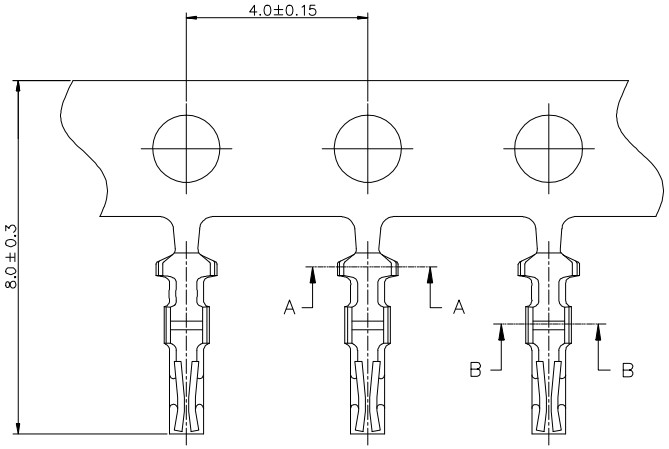

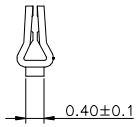

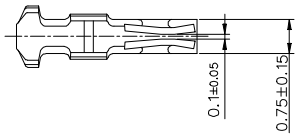

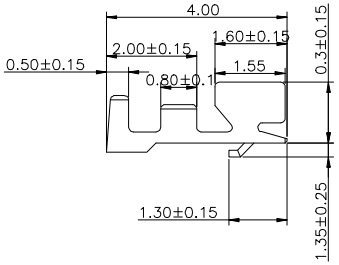

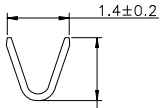

SEC:A–A

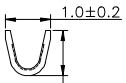

SEC:B–B

Ordering Information

GRC107 - 02 XX AB

Standard Plating
01=Tin

RATING
OPERATING TENPERATURE:–25~85°C
OPERATING VOLTAGE: 150V AC/DC
CURRENT RATING: 1.0 AMPS
DIELECTRIC WITHSTANGING VOLTAGE:
800V AC/Minute;
INSULATION RESISTANCE:1000MΩ Min;
CONTACT RESISTANCE:0.03Ω Max;

格稜股份有限公司 Greenconn Corporation	GENERAL TOLERANCE		DESIGNED:	DATE:	DWG. NO. GRC107–T2	TITLE. 1.0T-端子
	X.° ± 5.0°	X. ± 0.30	CHECKED:	DATE:	PART NO. GRC107–02 XX AB	
	.X° ± 3.0°	.X ± 0.25				
	.XX° ± 2.0°	.XX ± 0.15	APPROVED:	DATE:		
	.XXX° ± 1.0°	.XXX ± 0.10				
REV. B / UNIT. mm / SCALE. 1:1 / PAGE. 1/1						