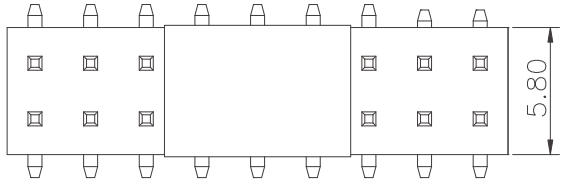

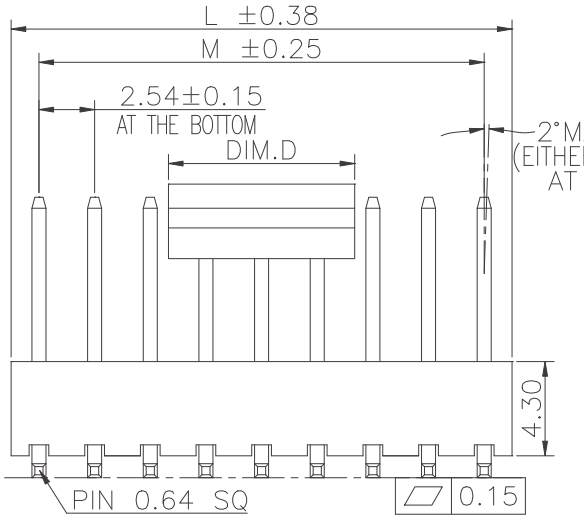

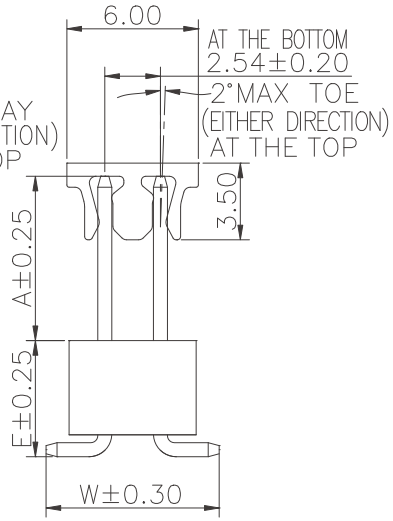

Specifications
Current Rating:3.0Amp
Insulation Resistance:1000MΩMin.
Dielectric Withstanding Voltage:600VAC
Contact Resistance:20mΩMax.
Operating Temperature:−40°C to +105°C
Materials
Contact Material:
Brass(Pin length less than 25mm)
Phosphor Bronze(The total length of pin is more than 25mm)
Insulator Material:
Nylon(High temperature resistance),
LCP(High temperature resistance),
UL 94V−0
All materials must meet Greenconn hazardous substances control standards.

Dim.D	NOTE
5.00	02Pins
6.00	03~08Pins
8.50	09~40Pins

Recommended P.C.Board Layout
(Tolerance:±0.05)

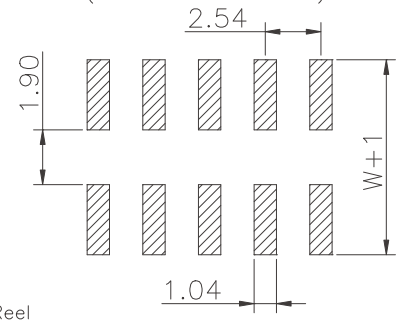

No. of PIN/ROW	Dimension Information M	L
02	2.54	5.08
03	5.08	7.62
04	7.62	10.16
05	10.16	12.70
06	12.70	15.24
07	15.24	17.78
08	17.78	20.32
09	20.32	22.86
10	22.86	25.40
11	25.40	27.94
12	27.94	30.48
13	30.48	33.02
14	33.02	35.56
15	35.56	38.10
16	38.10	40.64
17	40.64	43.18
18	43.18	45.72
19	45.72	48.26
20	48.26	50.80
21	50.80	53.34
22	53.34	55.88
23	55.88	58.42
24	58.42	60.96
25	60.96	63.50
26	63.50	66.04
27	66.04	68.58
28	68.58	71.12
29	71.12	73.66
30	73.66	76.20
31	76.20	78.74
32	78.74	81.28
33	81.28	83.82
34	83.82	86.36
35	86.36	88.90
36	88.90	91.44
37	91.44	93.98
38	93.98	96.52
39	96.52	99.06
40	99.06	101.60

Ordering Information

G PHC210 − XX XX A XXX X 1 X X

- Plastic specifications: 1=Single row, 2=Dual row, 3=Tripe row, 4=Quadruple
- Water code
- No. of Pins per Row: 02~40
- Plating code: 01=Tin, 02=Gold Flash, 05=Gold Flash/Tin, 22=Matte Tin
- Positioning column information: A=No locating post, B=Round post, C=Square post
- Pin length: See the drawing
- Insulator Material: R=Nylon(Halogen Free), C=LCP
- Color: 1=Black, 2=White, 3=Yellow, E=Beige
- Contact Material: A/S/K/T=Phosphor Bronze, B/Z/H/W=Brass
- Packing code: A=Box, B=Tray, C=Tube, D=Tape&Reel, E=Cap+Tube, F=Cap+Tape&Reel, G=Acetate Tape+Tube, H=Acetate Tape+Tape&Reel

格稜股份有限公司
Greenconn Corporation

REV.	UNIT.	SCALE.	PAGE.
01	mm	3:1	1/1

GENERAL TOLERANCE	
X.°±5.0°	X.±0.30
.X°±3.0°	.X±0.25
.XX°±2.0°	.XX±0.15
.XXX°±1.0°	.XXX±0.10

DWG. NO. GPHC210−CAXX

PART NO. GPHC210−XXXX AXXX X1XX

TITLE. 2.54 PIN HEADER DUAL ROWS SMT TYPE CONNECTOR