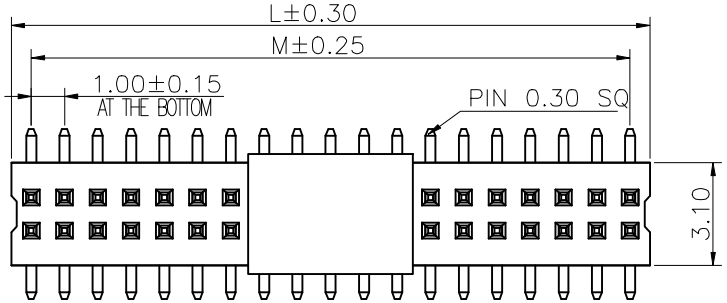

Recommended P.C.Board Layout
(Tolerance:±0.05)

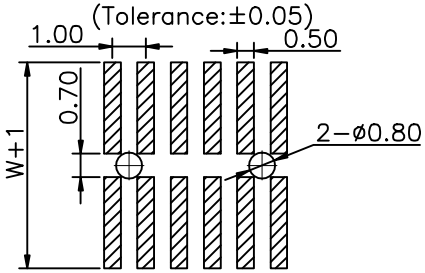

Specifications
Current Rating:1.0Amp
Insulation Resistance:1000MΩ Min.
Dielectric Withstanding Voltage:300VAC
Contact Resistance:20mΩ Max.
Operating Temperature:-40°C to +105°C
Materials
Contact Material:Phosphor Bronze
Insulator Material:High Temperature Thermoplastic, UL 94V-0 LCP or the equivalent material
All materials must meet Greenconn hazardous substances control standards.

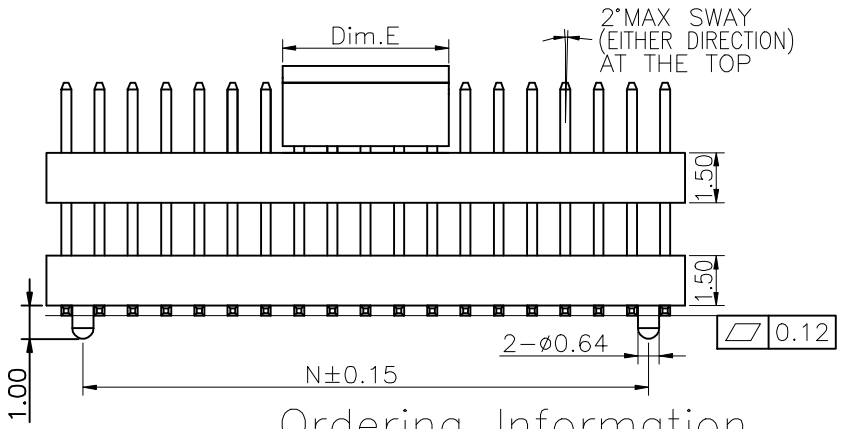

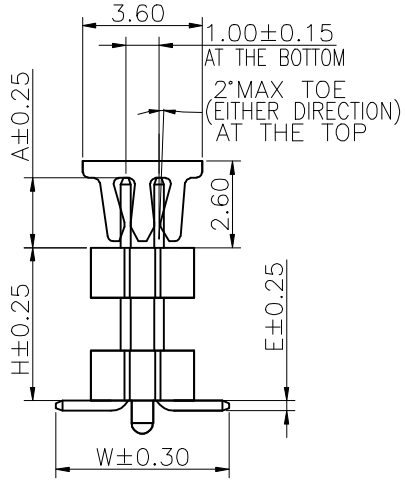

No. of PIN/ROW	Dimension Information		
	M	L	N
03	2.00	3.20	1.00
04	3.00	4.20	2.00
05	4.00	5.20	3.00
06	5.00	6.20	4.00
07	6.00	7.20	5.00
08	7.00	8.20	6.00
09	8.00	9.20	7.00
10	9.00	10.20	8.00
11	10.00	11.20	9.00
12	11.00	12.20	10.00
13	12.00	13.20	11.00
14	13.00	14.20	12.00
15	14.00	15.20	13.00
16	15.00	16.20	14.00
17	16.00	17.20	15.00
18	17.00	18.20	16.00
19	18.00	19.20	17.00
20	19.00	20.20	18.00
21	20.00	21.20	19.00
22	21.00	22.20	20.00
23	22.00	23.20	21.00
24	23.00	24.20	22.00
25	24.00	25.20	23.00
26	25.00	26.20	24.00
27	26.00	27.20	25.00
28	27.00	28.20	26.00
29	28.00	29.20	27.00
30	29.00	30.20	28.00
31	30.00	31.20	29.00
32	31.00	32.20	30.00
33	32.00	33.20	31.00
34	33.00	34.20	32.00
35	34.00	35.20	33.00
36	35.00	36.20	34.00
37	36.00	37.20	35.00
38	37.00	38.20	36.00
39	38.00	39.20	37.00
40	39.00	40.20	38.00

Dim.E	NOTE
3.00mm	03~04Pins
5.00mm	05~40Pins

Ordering Information

G PCC212 - XX XX A XXX C 1 A X

- Plastic specifications: 1=Single row, 2=Dual row, 3=Tripe row, 4=Quadruple
- Water code
- No. of Pins per Row: 02~40
- Plating code: 01=Tin, 02=Gold Flash, 05=Gold Flash/ Tin, 22=Matte Tin
- Positioning column information: A=No locating post, B=Round post, C=Square post
- Pin length: See the drawing
- Insulator Material: C=LCP, R=Nylon(Halogen Free)
- Color: 1=Black, 2=White, 3=Yellow, E=Beige
- Contact Material: A=Phosphor Bronze
- Packing code: A=Box, C=Tube, D=Tape&Reel, E=Cap+Tube, F=Cap+Tape&Reel

格稜股份有限公司
Greenconn Corporation

GENERAL TOLERANCE	
X.°±5.0°	X.±0.30
.X°±3.0°	.X±0.25
.XX°±2.0°	.XX±0.15
.XXX°±1.0°	.XXX±0.10

DESIGNED:	DATE:
CHECKED:	DATE:
CO SIGNED:	DATE:
APPROVED:	DATE:

DWG. NO. GPCC212-Series

PART NO. GPCC212-Series

TITLE. 1.00 PIN HEADER DAUL ROWS SMT TYPE CONNECTOR

REV.	UNIT.	SCALE.	PAGE.
01	mm	5:1	1/1