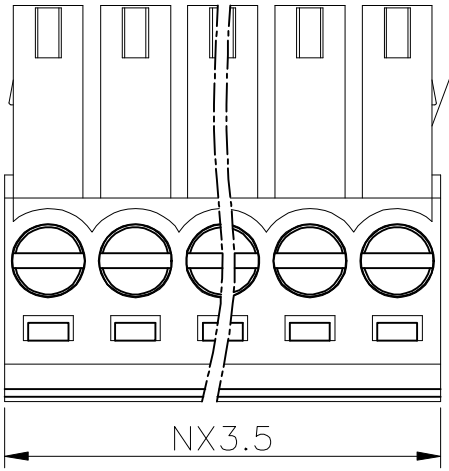

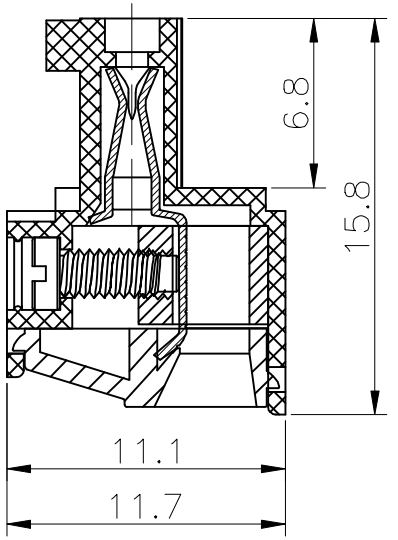

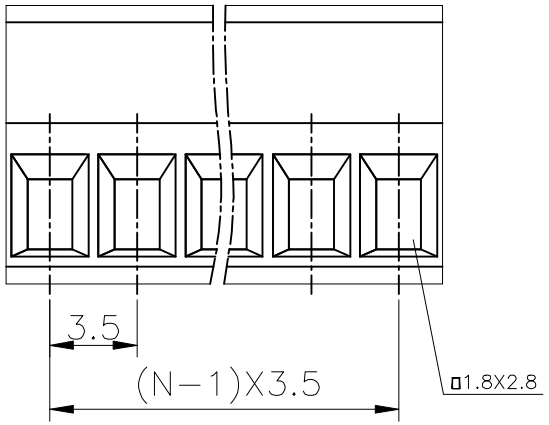

Specifications
Voltage rating:300VAC
Current rating:12 Amps/way max
Contact resistance: 20mΩ(max)
Insulation resistance: 5000MΩ/1000V
Withstanding Voltage: 2500VAC(1min)
Test time:60sec/1pcs
wire range: 16−24AWG
Mechanical:
Torque:2.5kgf.cm/M2
Operating temperature:−40°C to+105°C
Materials
Contact Material:Brass
Insulator Material: UL 94V−0 PA66
All materials must meet GREENCONN hazardous substances control standards.

Ordering Information

C XZZ106 − XX XX A 006 E X Z X

- XX: No. of Pins per Row 02~24
- XX: Standard Plating 01=Tin ……
- X: Color 1=Black 6=Gray 7=Blue G=Green
- X: Standard Packing R=Carton

格稜股份有限公司 Greenconn Corporation	GENERAL TOLERANCE		DESIGN:	DATE:	DWG. NO. CXZZ106−CA6EZ	TITLE. pitch 3.5mm - series
	X.°±2.0°	X.±0.50	CHECKED:	DATE:		
	.X°±/	.X±0.30			PART NO. CXZZ106−XXXXA006EXZX	
	.XX°±/	.XX±0.20	AUDITED:	DATE:		
	.XXX°±/	.XXX±/				
REV. 01 / UNIT. mm / SCALE. 1:1 / PAGE. 1/1						