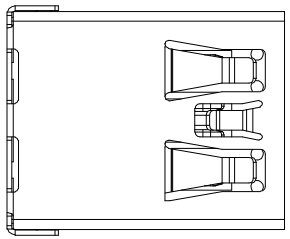

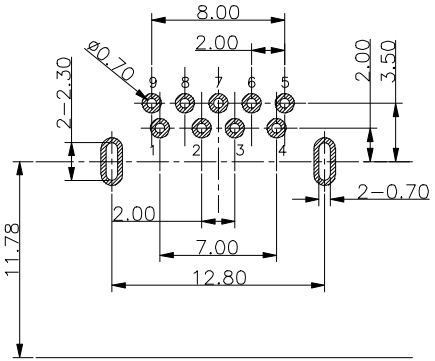

RECOMMANDED PCBA LAYOUT
(TOLERANCE+±0.05)

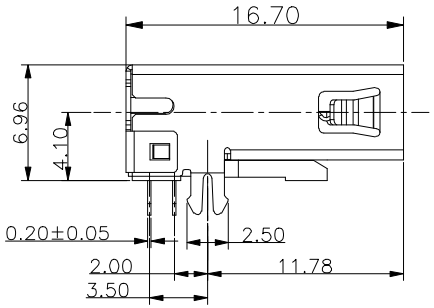

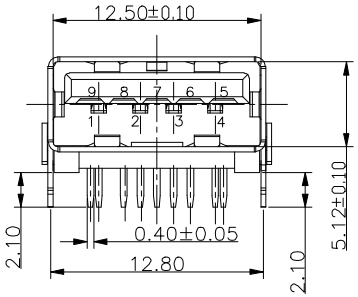

NOTE:
1.MATERIAL:
1.1 INSULATOR:HIGH TEMPERATURE PLASTIC
1.2 CONTACT:BRONZE
1.3 SHELL:BRASS & K7 & SPCC
2.ELECTRICAL CHARACTERISTICS;
2.1 CONTACTRESISTANCE:30mΩ MAX
2.2 CONTACT CURRENT RATING:1.5A
2.3 DIELECTRIC WITHSTANDING VOLTAGE:100 V R.M.S.
2.4 INSULATION RESISTANCE 100 MΩ MIN
2.5 OPERATING TEMPEROTURE:-40°C ~ 85°C
3 MECHANICAL CHARACTERISTICS:
3.1 MATING FORCE:3.57kgf MAX
3.2 UNMATING FORCE:1.02kgf MIN
3.3 DURABILITY:MANDATORY:1,500 CYCLES
4.PLATING
4.1 TERMINAL:
50u" MIN NICKEL ALL OVER
100u"MIN Tin ON SOLDER AREA
(1~30)u"Au ON CONTACT AREA
4.2 SHELL:100u"MIN.NICEL ALL OVER
All materials must meet GREENCONN hazardous substances control standards.

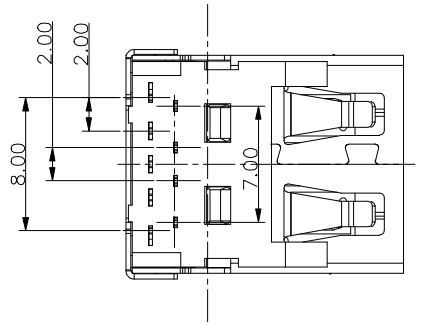

Ordering Information

C UZB161 - 09 XX A 001 C X Z X

- XX: Standard Plating
  02=Gold Flash
  Selective Plating
  05=Gold Flash/Tin
- X: Color
  7=Blue
  1=Black
- X: Standard Packing
  B=Tray

Pin NUMBER	SIGNAL NAME
1	VBUS
2	D-
3	D+
4	GND
5	StdA_SSRX-
6	StdA_SSRX+
7	GND_DRAIN
8	StdA_SSTX-
9	StdA_SSTX+
Shell	Shield

格 稜 股 份 有 限 公 司
Greenconn Corporation

GENERAL TOLERANCE	
X.°±	X.±
.X°±	.X±0.30
.XX°±	.XX±0.25
.XXX°±	.XXX±0.15

DESIGNED:	DATE:
CHECKED:	DATE:
APPROVED:	DATE:

DWG. NO. CUZB161-CA1CZ
PART NO. CUZB161-09XXA001CXZX

TITLE. USB 3.0 AF板上90度插板 鱼叉脚(2.5规格)无卷边

REV.	UNIT.	SCALE.	PAGE.
A1	mm	1:1	1/1