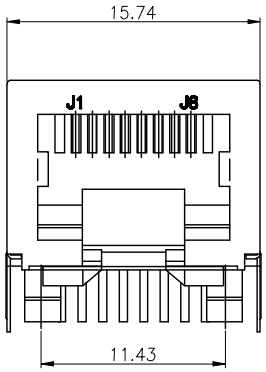

FRONT VIEW

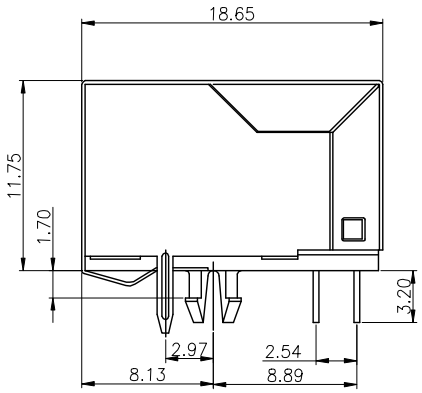

RIGHT SIDE VIEW

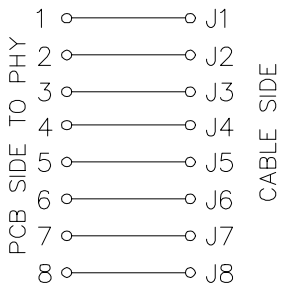

MATERIAL:
HOUSING: PBT, UL94V-0,BLACK
TERMINAL: PHOSPHOR BRONZE
6u" GOLD PLATING ON CONNTACT AREA
SHIELD: BRASS
MACHANICAL:
DURABILITY: 750 CYCLES MIN,12.5MM/MINUTE
INSERTION FORCE: 2.2KG.F MAX
RETENTION STRENGTH: 7.7KG.F BETWEEN JACK AND PLUG
OPERATING TEMPERATURE: -40°C~+85°C
STORAGE TEMPERATURE: -40°C~+85°C.
ELECTRICAL:
VOLTAGE: 125 VOLTS AC
CURRENT RATING: 1.5AMP
DIELECTRIC STRENGTH: 1000 VAC RMS 50HZ OR 60HZ,1 MIN
INSULATION RESISTANCE: 500 MEGA OHMS MIN. INITIAL 500V DC FOR 1 MINUTE
CONTACT RESISTANCE: SINGLE TERMINAL 30 MILLIOHMS MAX.INITIAL 50 MILLIOHMS MAX. AFTER DURABILITY TEST.
All materials must meet GREENCONN hazardous substances control standards.

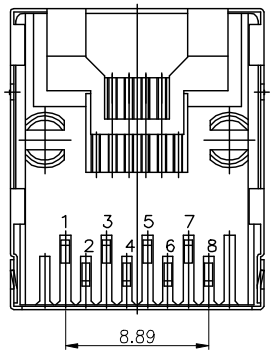

BOTTOM VIEW

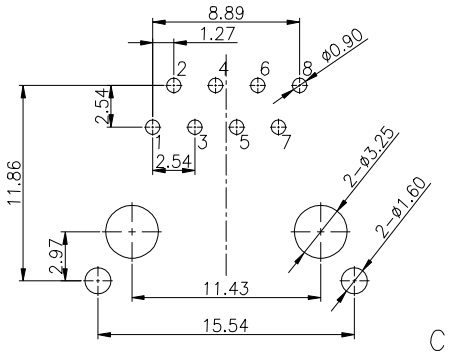

PCB LAYOUT(±0.05)

Ordering Information

C TEB114 - 08 XX B 001 A X S X

- XX: Standard Plating 06=Gold 6u"; Selective Plating 02=Gold Flash, 53=Gold 6u"/Tin
- X: Color 1=Black
- X: Standard Packing B=Tray

格稜股份有限公司 Greenconn Corporation	GENERAL TOLERANCE		DESIGNED:	DATE:	DWG. NO. CTEB114-CB1AS	TITLE. RJ45 1*1 8P8C 90°DIP
	X.°±3.0°	X.±0.35				
	.X°±2.0°	.X±0.30	CHECKED:	DATE:	PART NO. CTEB114-08XXB001AXSX	
	.XX°±1.5°	.XX±0.25				
	.XXX°±1.0°	.XXX±0.10	APPROVED:	DATE:		
REV. 01 / UNIT. mm / SCALE. 1:1 / PAGE. 1/1						