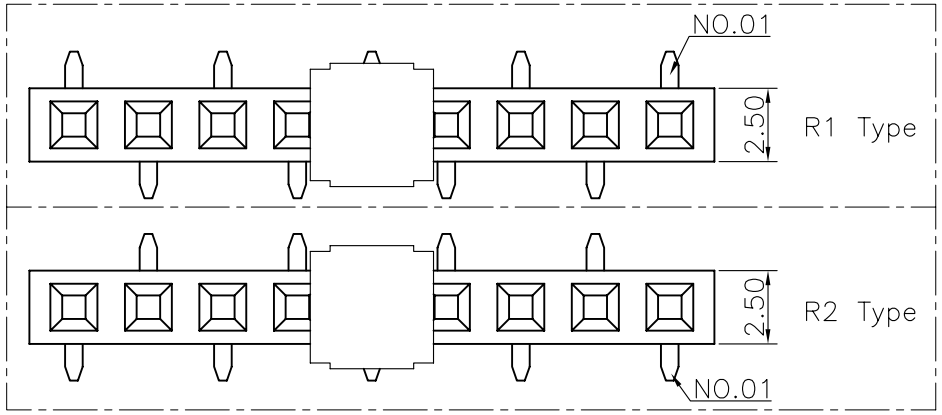

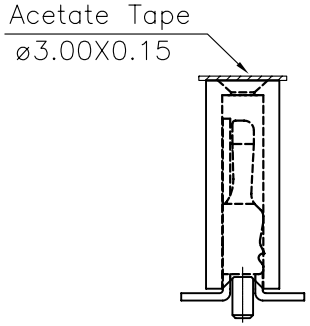

Specifications
Current Rating:3.0Amp
Insulation Resistance:1000MΩMin.
Dielectric Withstanding Voltage:600VAC
Contact Resistance:20mΩMax.
Operating Temperature:−40°C to +105°C
Materials
Contact Material:
Phosphor Bronze
Insulator Material:
Nylon(High temperature resistance),
LCP(High temperature resistance),
UL 94V−0
All materials must meet Greenconn hazardous substances control standards.

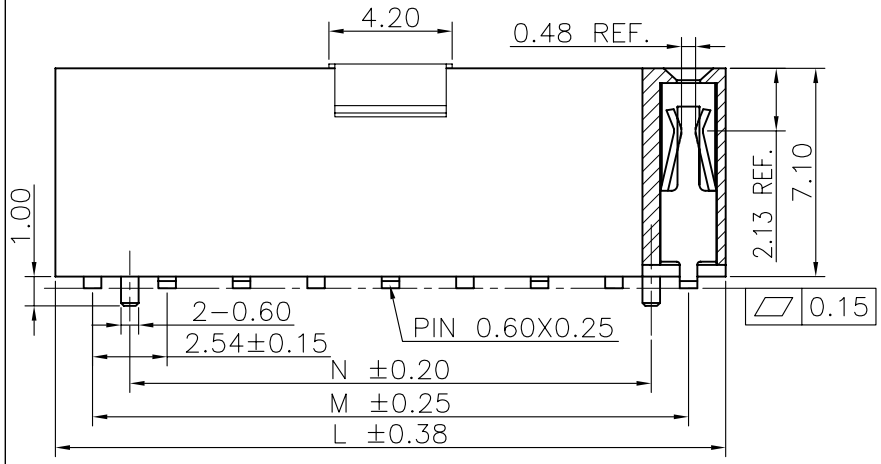

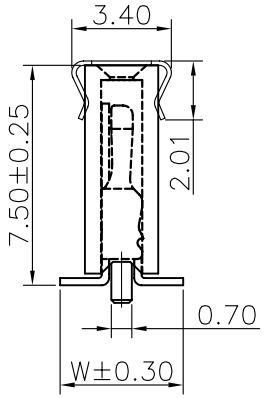

Recommended P.C.Board Layout
(Tolerance:±0.05)

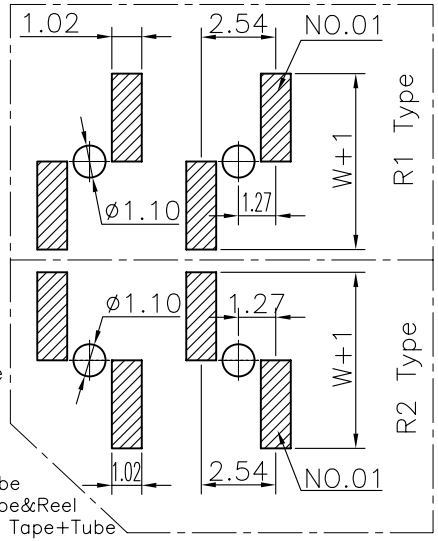

No. of PIN/ROW	Dimension Information		
	M	L	N
03	5.08	7.62	2.54
04	7.62	10.16	5.08
05	10.16	12.70	7.62
06	12.70	15.24	10.16
07	15.24	17.78	12.70
08	17.78	20.32	15.24
09	20.32	22.86	17.78
10	22.86	25.40	20.32
11	25.40	27.94	22.86
12	27.94	30.48	25.40
13	30.48	33.02	27.94
14	33.02	35.56	30.48
15	35.56	38.10	33.02
16	38.10	40.64	35.56
17	40.64	43.18	38.10
18	43.18	45.72	40.64
19	45.72	48.26	43.18
20	48.26	50.80	45.72
21	50.80	53.34	48.26
22	53.34	55.88	50.80
23	55.88	58.42	53.34
24	58.42	60.96	55.88
25	60.96	63.50	58.42
26	63.50	66.04	60.96
27	66.04	68.58	63.50
28	68.58	71.12	66.04
29	71.12	73.66	68.58
30	73.66	76.20	71.12
31	76.20	78.74	73.66
32	78.74	81.28	76.20
33	81.28	83.82	78.74
34	83.82	86.36	81.28
35	86.36	88.90	83.82
36	88.90	91.44	86.36
37	91.44	93.98	88.90
38	93.98	96.52	91.44
39	96.52	99.06	93.98
40	99.06	101.60	96.52

Ordering Information

C SHC121 − XX XX B XXX X 1 X X

- SHC121: Plastic specifications
  1=Single row
  2=Dual row
  3=Tripe row
  4=Quadruple
- XX: Water code
- XX: No. of Pins per Row 03~40
- B: Positioning column information
  A=No locating post
  B=Round post
  C=Square post
- XXX: Pin length See the drawing
- X: Plating code
  01=Tin
  02=Gold Flash
  05=Gold Flash/Tin
  22=Matte Tin
- X: Insulator Material
  R=Nylon(Halogen Free)
  C=LCP
- 1: Color
  1=Black
  2=White
  3=Yellow
  E=Beige
- X: Contact Material
  A/S/K/T=Phosphor Bronze
- X: Packing code
  A=Box
  B=Tray
  C=Tube
  D=Tape&Reel
  E=Cap+Tube
  F=Cap+Tape&Reel
  G=Acetate Tape+Tube
  H=Acetate Tape+Tape&Reel

格 稜 股 份 有 限 公 司
Greenconn Corporation

REV.	UNIT.	SCALE.	PAGE.
01	mm	4:1	1/1

GENERAL TOLERANCE	
X.°±5.0°	X.±0.30
.X°±3.0°	.X±0.25
.XX°±2.0°	.XX±0.15
.XXX°±1.0°	.XXX±0.10

DWG. NO.
CSHC121−CBXX

PART NO.
CSHC121−XXXX BXXX X1XX

TITLE.
2.54 FEMALE HEADER
SINGLE ROW SMT TYPE
CONNECTOR