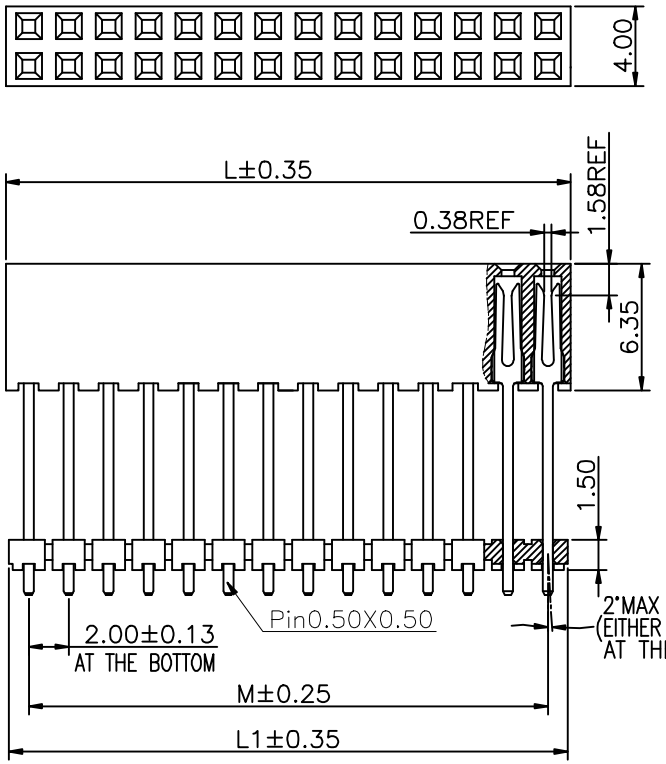

Recommended P.C.Board Layout
(Tolerance:±0.05)

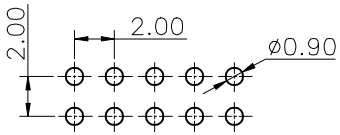

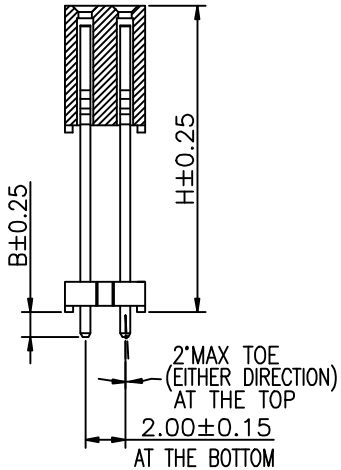

Specifications
Current Rating:2.0Amp
Insulation Resistance:1000MΩMin.
Dielectric Withstanding Voltage:500VAC
Contact Resistance:20mΩMax.
Operating Temperature:−40°C to +105°C
Materials
Contact Material:Phosphor Bronze
Insulator Material:
PBT(Not resistant to high temperature),
Nylon(High temperature resistance),
LCP(High temperature resistance),
UL 94V−0
All materials must meet Greenconn hazardous substances control standards.

No. of PIN/ROW	Dimension Information		
	M	L	L1
02	2.00	4.30	4.00
03	4.00	6.30	6.00
04	6.00	8.30	8.00
05	8.00	10.30	10.00
06	10.00	12.30	12.00
07	12.00	14.30	14.00
08	14.00	16.30	16.00
09	16.00	18.30	18.00
10	18.00	20.30	20.00
11	20.00	22.30	22.00
12	22.00	24.30	24.00
13	24.00	26.30	26.00
14	26.00	28.30	28.00
15	28.00	30.30	30.00
16	30.00	32.30	32.00
17	32.00	34.30	34.00
18	34.00	36.30	36.00
19	36.00	38.30	38.00
20	38.00	40.30	40.00
21	40.00	42.30	42.00
22	42.00	44.30	44.00
23	44.00	46.30	46.00
24	46.00	48.30	48.00
25	48.00	50.30	50.00
26	50.00	52.30	52.00
27	52.00	54.30	54.00
28	54.00	56.30	56.00
29	56.00	58.30	58.00
30	58.00	60.30	60.00

Ordering Information

CSFA209 – XX XX A XXX X 1 A X

- Plastic specifications: 1=Single row, 2=Dual row, 3=Tripe row, 4=Quadruple
- Water code
- No. of Pins per Row: 02~30
- Plating code: 01=Tin, 02=Gold Flash, 05=Gold Flash/Tin, 22=Matte Tin
- Positioning column information: A=No locating post, B=Round post, C=Square post
- Pin length: See the drawing
- Insulator Material: A=PBT, R=Nylon(Halogen Free), C=LCP
- Color: 1=Black, 2=White, 3=Yellow, E=Beige
- Contact Material: A=Phosphor Bronze
- Packing code: A=Box, C=Tube

格稜股份有限公司
Greenconn Corporation

GENERAL TOLERANCE	
X.°±5.0°	X.±0.30
.X°±3.0°	.X±0.25
.XX°±2.0°	.XX±0.15
.XXX°±1.0°	.XXX±0.10

REV.	UNIT.	SCALE.	PAGE.
01	mm	3:1	1/1

DESIGNED:	DATE:	DWG. NO.	CSFA209−CAXX
CHECKED:	DATE:		
CO SIGNED:	DATE:	PART NO.	CSFA209−XXXX AXXX X1AX
APPROVED:	DATE:		

TITLE.
2.00 FEMALE HEADER
DUAL ROWS DIP TYPE
CINNECTOR