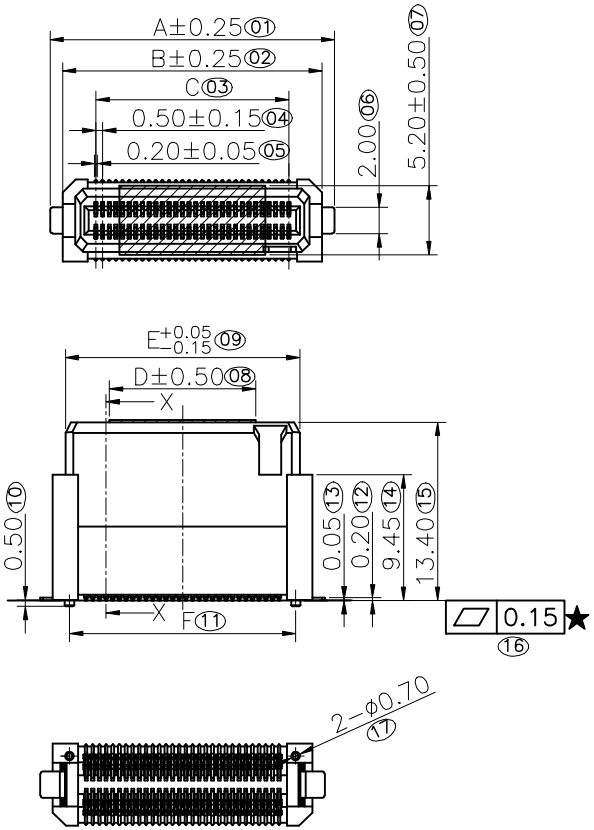

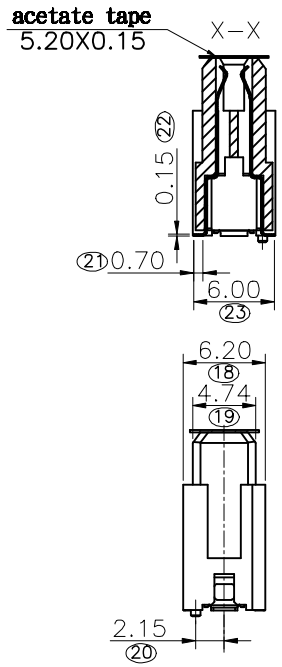

Specifications
Current Rating:0.4Amp
Insulation Resistance:100MΩMin.
Dielectric Withstanding Voltage:250VAC
Contact Resistance:80mΩ Max.
Operating Temperature:−40°C to +105°C
Materials
Contact Material:copper alloy
Insulator Material:High Temperature Thermoplastic, UL 94V−0 LCP or the equivalent material
All materials must meet GREENCONN hazardous ☆substances control standards.
"★": Critical Characteristics.
indicates product characteristics, functionalities, and manufacturing processes regarding to customer's specifications
"☆": Safety Features
indicates product characteristics, functionalities, and manufacturing processes complying to legal regulations stated by local government

Recommended P.C.Board Layout
(Tolerance:±0.05)

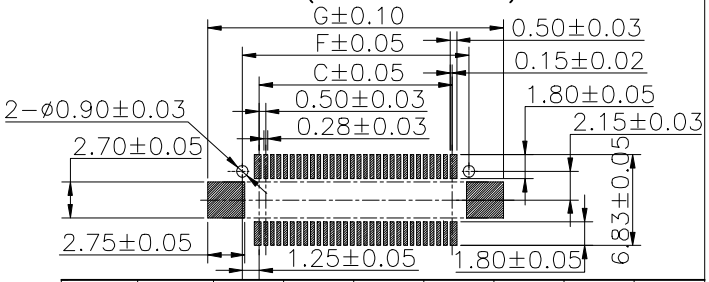

备注	No. of PIN/ROW	A	B	C	D	E	F	G
		Dimension Intormation						
未用料	80	46.40	44.50	39.50	28.50	42.60	42.00	47.20
未用料	70	41.40	39.50	34.50	28.50	37.60	37.00	42.20
未用料	60	36.40	34.50	29.50	28.50	32.60	32.00	37.20
已用料	50	31.40	29.50	24.50	28.50	27.60	27.00	32.20
未用料	40	26.40	24.50	19.50	11.00	22.60	22.00	27.20
未用料	30	21.40	19.50	14.50	11.00	17.60	17.00	22.20
未用料	20	16.40	14.50	9.50	11.00	12.60	12.00	17.20
已用料	15	13.90	12.00	7.00	11.00	10.10	9.50	14.70

Ordering Information

C GAC201 − XX XX B 003 C 1 9 X

- No. Of Pins Per Row: 15/20/30/40/50/60/70/80
- Standard Plating: 02=Gold Flash; 06=6u"AU/Gold Flash; 09=3u"AU/Gold Flash
- Color: 1=Black
- Standard Packing: H=Acetate tape+Tape&Reel

Greenconn
Website:www.greenconn.com
E−mail:sales@greenconn.com

REV.	UNIT.	SCALE.	PAGE.
A	mm	2:1	1/1

3RD.ANG PROJ.

GENERAL TOLERANCE	
X.°±5.0°	X.±0.35
.X°±3.0°	.X±0.30
.XX°±2.0°	.XX±0.20
.XXX°±1.0°	.XXX±0.10

DESIGNED: DATE:
CHECKED: DATE:
APPROVED: DATE:

DWG. NO. CGAC201−CB003
PART NO. CGAC201−XXXXB003C19X

TITLE. 0.5mm PITCH BTB FLOATING CONNECTOR