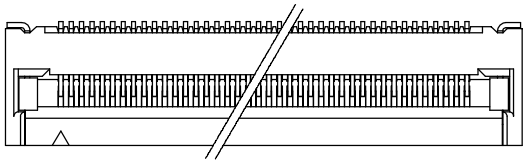

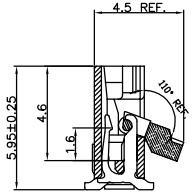

SECTION A–A

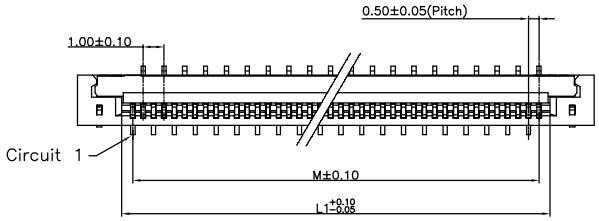

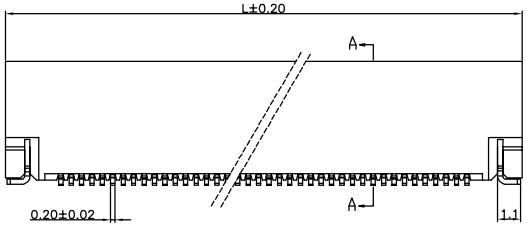

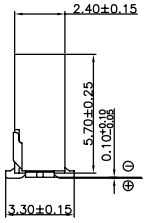

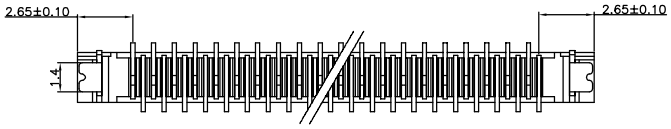

Ordering Information

CFAC144 – XX XX A 003 C X A X

- XX: No. of Pins per Row, 04~60
- XX: Standard Plating, 01=Tin
- A: (fixed)
- 003: (fixed)
- C: (fixed)
- X: Color, 2=White
- A: (fixed)
- X: Standard Packing, H=Film + T&R; Selective Packing, C=Tube, D=Tape Reel

Specifications

Insulation Resistance: 500MΩ Min.
Dielectric Withstanding: 500V, AC/minute
Contact Resistance: 0.03Ω Max.
Rating voltage: 50V, AC, DC
Operating Temperature:−25°C to +85°C

Materials

Contact Material: Phosphor Bronze
Fitting Nail: Phosphor Bronze
Housing: High Temperature Thermoplastic UL 94V−0 LCP
Actuator: PA9T/LCP(UL94V−0)
All materials must meet Greenconn requirement for environment protection.

Dimension Information							
No. of PIN/ROW	M	L1	L	No. of PIN/ROW	M	L1	L
04	1.50	2.60	6.80	33	16.00	17.10	21.30
05	2.00	3.10	7.30	34	16.50	17.60	21.80
06	2.50	3.60	7.80	35	17.00	18.10	22.30
07	3.00	4.10	8.30	36	17.50	18.60	22.80
08	3.50	4.60	8.80	37	18.00	19.10	23.30
09	4.00	5.10	9.30	38	18.50	19.60	23.80
10	4.50	5.60	9.80	39	19.00	20.10	24.30
11	5.00	6.10	10.30	40	19.50	20.60	24.80
12	5.50	6.60	10.80	41	20.00	21.10	25.30
13	6.00	7.10	11.30	42	20.50	21.60	25.80
14	6.50	7.60	11.80	43	21.00	22.10	26.30
15	7.00	8.10	12.30	44	21.50	22.60	26.80
16	7.50	8.60	12.80	45	22.00	23.10	27.30
17	8.00	9.10	13.30	46	22.50	23.60	27.80
18	8.50	9.60	13.80	47	23.00	24.10	28.30
19	9.00	10.10	14.30	48	23.50	24.60	28.80
20	9.50	10.60	14.80	49	24.00	25.10	29.30
21	10.00	11.10	15.30	50	24.50	25.60	29.80
22	10.50	11.60	15.80	51	25.00	26.10	30.30
23	11.00	12.10	16.30	52	25.50	26.60	30.80
24	11.50	12.60	16.80	53	26.00	27.10	31.30
25	12.00	13.10	17.30	54	26.50	27.60.	31.80
26	12.50	13.60	17.80	55	27.00	28.10	32.30
27	13.00	14.10	18.30	56	27.50	28.60	32.80
28	13.50	14.60	18.80	57	28.00	29.10	33.30
29	14.00	15.10	19.30	58	28.50	29.60	33.80
30	14.50	15.60	19.80	60	29.50	30.60	34.80
31	15.00	16.10	20.30				
32	15.50	16.50	20.80				

格稜股份有限公司
Greenconn Corporation

REV.	UNIT.	SCALE.	PAGE.
A	mm	1:1	1/2

GENERAL TOLERANCE	
X.°±5.0°	X.±0.30
.X°±3.0°	.X±0.25
.XX°±2.0°	.XX±0.15
.XXX°±1.0°	.XXX±0.10

DESIGN:	DATE:	DWG. NO. CFAC144−CA3CA
CHECKED:	DATE:	PART NO. CFAC144−XXXXA003CXAX
AUDITED:	DATE:	TITLE. 0.5 立貼 FPC

Ordering Information

CFAC144 – XX XX A 003 C X A X

- XX: No. of Pins per Row 04~60
- XX: Standard Plating 01=Tin
- X: Color 2=White
- X: Standard Packing H=Film + T&R; Selective Packing C=Tube D=Tape Reel

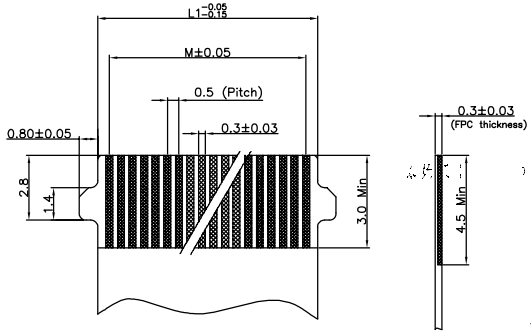

適用FPC寸法（帶勾）
Applicable FPC(+Lock)

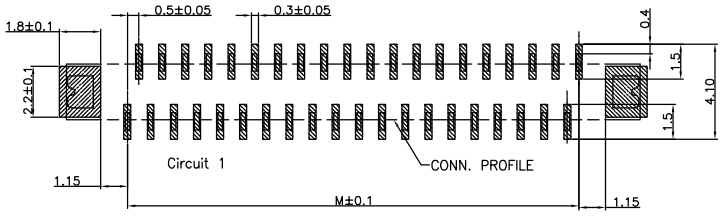

適用線路板
Recommended PCB LAYOUT

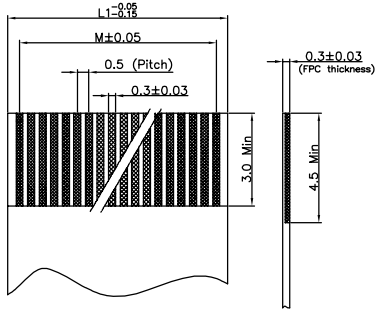

適用FPC寸法
Applicable FPC

Specifications

Insulation Resistance: 500MΩ Min.
Dielectric Withstanding: 500V, AC/minute
Contact Resistance: 0.03Ω Max.
Rating voltage: 50V, AC, DC
Operating Temperature:−25°C to +85°C

Materials

Contact Material: Phosphor Bronze
Fitting Nail: Phosphor Bronze
Housing: High Temperature Thermoplastic UL 94V−0 LCP
Actuator: PA9T/LCP(UL94V−0)

All materials must meet Greenconn requirement for environment protection.

Dimension Information

No. of PIN/ROW	M	L1	L	No. of PIN/ROW	M	L1	L
04	1.50	2.60	6.80	33	16.00	17.10	21.30
05	2.00	3.10	7.30	34	16.50	17.60	21.80
06	2.50	3.60	7.80	35	17.00	18.10	22.30
07	3.00	4.10	8.30	36	17.50	18.60	22.80
08	3.50	4.60	8.80	37	18.00	19.10	23.30
09	4.00	5.10	9.30	38	18.50	19.60	23.80
10	4.50	5.60	9.80	39	19.00	20.10	24.30
11	5.00	6.10	10.30	40	19.50	20.60	24.80
12	5.50	6.60	10.80	41	20.00	21.10	25.30
13	6.00	7.10	11.30	42	20.50	21.60	25.80
14	6.50	7.60	11.80	43	21.00	22.10	26.30
15	7.00	8.10	12.30	44	21.50	22.60	26.80
16	7.50	8.60	12.80	45	22.00	23.10	27.30
17	8.00	9.10	13.30	46	22.50	23.60	27.80
18	8.50	9.60	13.80	47	23.00	24.10	28.30
19	9.00	10.10	14.30	48	23.50	24.60	28.80
20	9.50	10.60	14.80	49	24.00	25.10	29.30
21	10.00	11.10	15.30	50	24.50	25.60	29.80
22	10.50	11.60	15.80	51	25.00	26.10	30.30
23	11.00	12.10	16.30	52	25.50	26.60	30.80
24	11.50	12.60	16.80	53	26.00	27.10	31.30
25	12.00	13.10	17.30	54	26.50	27.60.	31.80
26	12.50	13.60	17.80	55	27.00	28.10	32.30
27	13.00	14.10	18.30	56	27.50	28.60	32.80
28	13.50	14.60	18.80	57	28.00	29.10	33.30
29	14.00	15.10	19.30	58	28.50	29.60	33.80
30	14.50	15.60	19.80	60	29.50	30.60	34.80
31	15.00	16.10	20.30				
32	15.50	16.50	20.80				

格稜股份有限公司
Greenconn Corporation

REV.	UNIT.	SCALE.	PAGE.
A	mm	1:1	2/2

GENERAL TOLERANCE	
X.°±5.0°	X.±0.30
.X°±3.0°	.X±0.25
.XX°±2.0°	.XX±0.15
.XXX°±1.0°	.XXX±0.10

DESIGN:	DATE:
CHECKED:	DATE:
AUDITED:	DATE:

DWG. NO. CFAC144−CA3CA

PART NO. CFAC144−XXXXA003CXAX

TITLE. 0.5 立貼 FPC