Female Header

pitch 1.27mm (0.05") | Single row | Dip

CSEA113 Series

Specifications

Current Rating :	1.0 Ampere
Insulation Resistance :	1000 MΩ Min
Dielectric Withstanding :	300V AC
Contact Resistance :	20 mΩ Max
Operating Temperature :	-40˚C to +105˚C

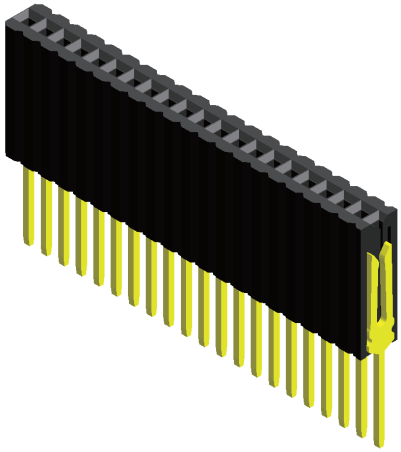

Materials

Contact Material :	Phosphor Bronze
Insulation Material :	High Temperature Thermoplastic, 94V-0 LCP

All materials must meet Greenconn's requirements for environmental protection.

Mating with

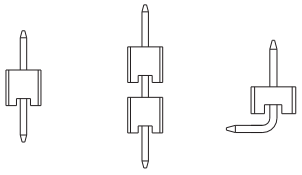

P.S. : Suggested mating pin length : 3.5 ~ 6.4 mm

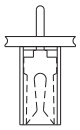

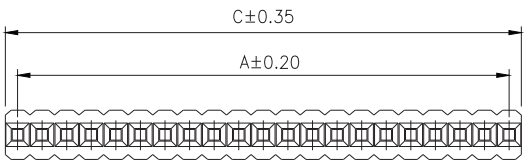

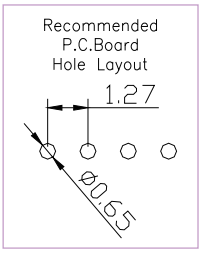

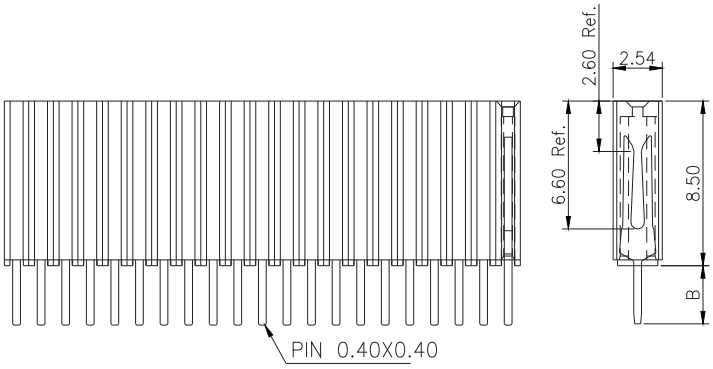

* For Coded Dimension Not Inside The Table, Please Refer To"Ordering Information"

No. of Pins/Row	Dimension Information A	Dimension Information C		No. of Pins/Row	Dimension Information A	Dimension Information C		No. of Pins/Row	Dimension Information A	Dimension Information C		No. of Pins/Row	Dimension Information A	Dimension Information C	
				11	12.70	13.97		21	25.40	26.67		31	38.10	39.37	
02	1.27	2.54		12	13.97	15.24		22	26.67	27.94		32	39.37	40.64	
03	2.54	3.81		13	15.24	16.51		23	27.94	29.21		33	40.64	41.91	
04	3.81	5.08		14	16.51	17.78		24	29.21	30.48		34	41.91	43.18	
05	5.08	6.35		15	17.78	19.05		25	30.48	31.75		35	43.18	44.45	
06	6.35	7.62		16	19.05	20.32		26	31.75	33.02					
07	7.62	8.89		17	20.32	21.59		27	33.02	34.29					
08	8.89	10.16		18	21.59	22.86		28	34.29	35.56					
09	10.16	11.43		19	22.86	24.13		29	35.56	36.83					
10	11.43	12.70		20	24.13	25.40		30	36.83	38.10					

Ordering Information

CSEA1 [XX] - XX [XX] [X] [XXX] C1AC

Height Option (H) Standard
- 13

No. of Pins per Row
- 02 ~ 35

Standard Plating
- 02 : Gold Flash

Selective Plating
- 01 : Tin
- 05 : Gold Flash / Tin

Pin Length (B)
- A
- 001 : B=3.00
- 002 : B=2.70

For special length requirement
Please contact our sales personnel

Stardand Packaging : Tube

Due to technical progress, all designs, specifications and components are subject to change without notice.